Foxboro
by Schneider Electric

40P Flow Recorders, Indicators, and Controllers

RECORDING CONTROLLER

INDICATING CONTROLLER

CIRCULAR CHART RECORDER

SECTOR SCALE INDICATOR

CONCENTRIC SCALE INDICATOR

The 40P Flow Recorders, Indicators, and Controllers use the dependable Type 37 Diaphragm Measuring Element as the differential pressure sensor. This accurate and time-proven combination continuously records, indicates, or controls flow rate (differential pressure is proportional to the square of the flow rate) in conjunction with primary devices such as orifice plates, flow nozzles, or venturi tubes. These instruments can also be used to measure differential liquid levels, or other differences in pressure.

MANY APPLICATIONS - HIGH PERFORMANCE

These instruments are used in a variety of liquid, gas, and vapor flow applications, and liquid level head applications. They are particularly suited for wet gas flow measurement because of a self-draining feature. Because no mercury is used in the element, there is no need for precise leveling. These mercuryless flowmeters have an inherent stability and excellent accuracy.

WIDE SELECTION OF CALIBRATION RANGES

Differential pressure (ΔP) calibration ranges are available between 0 to 5 and 0 to 50 kPa, 0 to 20 and 0 to 200 inH_2O, and 0 to 50 and 0 to 500 mbar. Zero differential pressure can be elevated (compound range) so that the lower range value is as low as minus 50% of span; or suppressed so that the upper range value is as high as either 150% of span, or 50 kPa (200 inH_2O, 500 mbar), whichever is less.

CHOICE OF CONTROL MODES

On-off, proportional, proportional plus derivative, proportional plus integral (reset), proportional plus integral plus derivative, and narrow band proportional actions are available.

DURABLE, WEATHERPROOF CONSTRUCTION

A glass fiber reinforced case and gasketed door, with a shatterproof glass window, provide exceptional protection against many hostile environments. This construction provides the environmental protection of IEC IP53 and the raintight protection of NEMA™ Type 3.

OVERRANGE PROTECTION

Overrange to 14 MPa (2000 psi, 140 bar or kg/cm^2) does not damage the differential pressure element, nor significantly affect calibration. This is because the diaphragms are equipped with spacer rings which are welded to the inner fold of each diaphragm section. These rings provide positive, solid stops if the element is subjected to overrange.

PRECISION MOTION TRANSFER

Smooth, low friction motion is transferred from the diaphragm by a simple drive bar pivoted on flexure strips of cobalt-nickel metal alloy. The drive bar is linked to the base instrument mechanism to provide a crisp, direct, linear transmission of differential pressure changes. A micrometer adjustment on the pen or pointer arm enables precise zero setting.

EXTERNAL DAMPING

Damping occurs when the area of the passage between the two diaphragms is restricted. This is conveniently accomplished by turning the damping screw adjustment located externally, at the top of the element. The damper is adjustable while the instrument is in service and under pressure. It provides accurate control of instrument response, yet cannot damp out the measurement completely.

OPERATING CONDITIONS

Influence	Reference Operating Conditions	Normal Operating Condition Limits	Operative Limits
Ambient Temperature	24 ±2°C (75 ±3°F)	–30 and +60°C (–20 and +140°F)	–30 and +60°C (–20 and +140°F)
Relative Humidity	50 ±10%	5 and 95%	5 and 95%
Supply Voltage (a)	120 ±1 V ac, 240 ±2 V ac	Rated +10, –15%	Rated +10, –15%
Supply Frequency (a)	50 ±3 Hz, 60 ±3 Hz	47 and 63 Hz	47 and 63 Hz
Supply Pressure (b)	140 kPa 20 psi 1.4 bar or kg/cm^2	115 and 155 kPa 17 and 22 psi 1.15 and 1.55 bar or kg/cm^2	115 and 155 kPa 17 and 22 psi 1.15 and 1.55 bar or kg/cm^2
Position	Upright	5° tilt (any direction)	–

a. For use with recorder electrical chart drive, as specified.

b. For use with controllers only.

PERFORMANCE SPECIFICATIONS

Upper Range Differential Pressure Values from			Performance in Percent of Upper Range Value (a)		
kPa	inH_2O	mbar	Accuracy	Repeatability	Dead Band
5 up to 12.5	20 up to 50	50 up to 125	±0.50	0.20	0.02
12.5 up to 25	50 up to 100	125 up to 250	±0.50	0.15	0.02
25 up to 50	100 up to 200	250 up to 500	±0.25 (b)	0.10	0.02

a. Performance stated is from input to pen or pointer, under reference operating conditions, and for zero-based ranges. Performance values for suppressed- and elevated-zero ranges are in percent of span.

b. Accuracy is ±0.50% when concentric scale indicator is used.

Ambient Temperature Effect (Controller)

Maximum output change, at midspan and 100% proportional band, for a 28°C (50°F) change from reference operating conditions is less than 1.0% of output span.

Supply Pressure Effect (Controller)

Maximum output change at midspan for a 115 to 155 kPa (17 to 22 psi, 1.15 to 1.55 bar or kg/cm^2) supply pressure change is less than 1.2% of output span.

Position Effect (Controller)

Maximum output change, at midspan and 100% proportional band, for a 5° tilt in any direction from the upright position is less than 0.5% of output span.

FUNCTIONAL SPECIFICATIONS

Controller Output Signal

20 to 100 kPa, 3 to 15 psi, or 0.2 to 1.0 bar or kg/cm^2, selectable using Model Code.

Controller Output Gauge

0 to 50 kPa, 0 to 22 psi, or 0 to 1.5 bar or kg/cm^2, selectable using Model Code.

Controller Action

Output signal either increases or decreases with increasing measurement, as specified; action can be reversed in the field.

Controller Range

Refer to Model Code.

Full Proportional

4 to 400%, dial marked 10 to 200%.

Derivative

0.01 to >50 minutes per repeat.

Integral (Reset)

0.01 to >50 minutes per repeat.

Narrow Band Proportional

1/2 to 25% or 1 to 50%.

Controller Set Point Adjustment

By means of a knob mounted inside the case.

Controller Dual Indicating Gauge

Visible through a window near the top of the door. The output signal is indicated on the upper scale and the supply pressure on the lower scale. Both are expressed in kPa, psi, bar, or kg/cm^2, as specified.

Controller Index Pointer

The setting index in sector scale indicating controllers has a bright orange tip. The setting index in recording controllers is silver color.

Recorder Pens

One pen is standard. Second, third, or fourth can be used in combination recorders for pressure or temperature measurement, as specified.

Box-Type

For 1, 2, 3, or 4 pen instruments.

Fiber Tip-Type

For 1, 2, 3, or 4 pen instruments. Disposable ink cartridge with integral fiber-tip pen. Minimum of 150 m (500 ft) ink line at a nominal 25 mm/s (1 in/s) pen speed.

Recorder Electrical Chart Drive

The standard speed is one revolution per 24 hours for nominal 120 V, 60 Hz power, selectable using Model Code. Refer to “OPTIONAL FEATURES” section for electrical chart drive options.

Recorder Mechanical Chart Drive

The standard speed is on revolution per 24 hours with a 24 hour wind, selectable using Model Code. Refer to “OPTIONAL FEATURES” section for mechanical chart drive options.

Recorder Expendable Accessories

Charts

100 HUMITEX™ nominal 300 mm (12 in) circular charts, with nominal 100 mm (4 in) calibrated scale, are supplied with each instrument. (Refer to Chart and Dial Catalog 600.)

Data Card

A data card is supplied for displaying the chart factor, and other applicable data. This card is inserted in a card holder located in the lower front of the instrument and visible through the glass window.

Indicator Pointer

Single range sector scale indicators have an orange pointer. Double range sector scale indicators have one orange and one black pointer.

Indicator Scales

Black markings on white background. Refer to Chart and Dial Catalog 600 for available ranges.

Sector Scale

The effective length is 175 mm (6.8 in).

Concentric Scale

The effective length is 595 mm (23.4 in).

Type 37 Differential Pressure Element

Element Quantity

One only (Type 37) per instrument. Refer to element combinations under “OPTIONAL FEATURES” section if additional pressure or temperature measurements are required.

Element Maximum Process Pressure

14 MPa (2000 psi, 140 bar or kg/cm^2).

Element Standard Ranges

Refer to Model Code for the standard calibration zero-based and compound ranges (elevated zero) available. Refer to “OPTIONAL FEATURES” section for Optional Calibrations offered.

Element Ambient Temperature Compensation

Bimetallic cross unit, immersed in filling liquid, senses ambient temperature change and adjusts volumetric capacity of diaphragm assembly. This ensures against changes in calibration due to ambient temperature changes from -30 to +60°C (-20 to +140°F). Compensator requires no adjustment and accommodates all ranges.

PRODUCT SAFETY SPECFICATIONS

Electrical Classification

These instruments are designed to meet the requirements of the Occupational Safety and Health Administration (OSHA). When properly installed, they can be used in General Purpose Ordinary Locations. They are also suitable (without internal illumination and Type 70 contact options) for Class I, Groups A, B, C, and D, Division 2 Hazardous Locations.

Pressure Safety

These instruments are designed to provide safety for personnel when momentarily over-pressurized to 1.5 times the maximum rated process pressure. No instrument degradation takes place when instruments are subjected to this pressure for periods up to 1 minute.

MODEL CODE

Description	Model
Rectangular Plastic Case (Recorders and Indicators)	40P
Function	
Circular Chart Recorder	R
Sector Scale Indicator	N
Concentric Scale Indicator	K
Internal Mechanism	
Standard Recorder (40PR)	–R
Standard Sector Scale Indicator (40PN)	–N
Standard Concentric Scale Indicator (40PK)	–K
Recorder or Indicator with Type 70 Contacts	–E
Mounting	
Yoke	Y
Chart Drive or Scale (For Optional Chart Drives refer to “OPTIONAL FEATURES” section)	
Electrical Chart Drive, 24 hour rotation, 120 V, 60 Hz (40PR)	E
Mechanical Chart Drive, 7 day plus 24 hour up to 9 day rotation, two speed chart drive (40PR)	M
No Chart Drive	X
Sector Scale (40PN)	N
Concentric Scale (40PK)	K
Pens or Pointers (Refer to recorder pens in “FUNCTIONAL SPECIFICATIONS” section)	
One pen (40PR) or one pointer (40PN or 40PK)	1
Pens or Scale Type (Refer to recorder pens in “FUNCTIONAL SPECIFICATIONS” section)	
Box-Type Pen (40PR)	B
Fiber-Tip Disposable Pen (40PR)	F
Single Range Scale (40PN or 40PK)	S
Double Range Scale (40PN only)	D
Type 37 Differential Pressure Element	
Zinc-Cobalt Carbon Steel Body and Cover, ASTM Type A105	/DE-A
Stainless Steel Body and Covert, ASTM Type A1B2, Grade F316	/DE-B
Examples: 40PR-RYE1F/DE-A; 40PK-KYM1S/DE-B	

Upper range values less than 12.5 kPa (50 inH2O, 125 mbar) should not be used with concentric scale indicators. Upper range values less than 12.5 kPa (50 inH2O, 125 mbar) should not be used with Type 70 Electrical Contacts.

MODEL CODE

Description	Model
Rectangular Plastic Case (Single Action Controllers)	40P
Function	
Recording	R
Indicating with Sector Scale	N
Action	
Single	–A
Control	
On-Off	1
Full Proportional	2
Full Proportional plus Derivative	3
Full Proportional plus Integral (Reset)	4
Full Proportional plus Integral plus Derivative	5
Narrow Band Proportional	6
Automatic/Manual Internal Transfer Switching	
Without internal regulator, without transfer switch (A1 only)	J
Two position nozzle seal switch (A2, A3, A4, A5, and A6)	L
Balanceable automatic/manual unit - right (A2, A3, A4, and A5)	N
Balanceable automatic/manual unit - left (A2, A3, A4, and A5)	P
Output Signal and Gauge	
3 to 15 psi signal, 22 psi gauge	2
0.2 to 1.0 kg/cm^2 gauge	4
20 to 100 kPa signal, 150 kPa gauge	5
0.2 to 1.0 bar signal, 1.5 bar gauge	6
Mounting	
Yoke Mounting	Y
Chart Drive or Scale (For Optional Chart Drives refer to “OPTIONAL FEATURES” section)	
Electrical Chart Drive, 24 hour rotation, 124 V, 60 Hz (40PR)	E
Mechanical Chart Drive, 24 hour rotation, 24 hour wind (40PR)	M
No Chart Drive	X
Sector Scale (40PN)	N
Pens or Pointers	
One pen (40PR) or one pointer (40PN)	1
Pen or Scale Type	
Box-Type Pen (40PR)	B
Fiber-Tip Disposable Pen (40PR)	F
Single Range Scale (40PN)	S
Double Range Scale (40PN)	D
Type 37 Differential Pressure Element	
Zinc-Cobalt Carbon Steel Body and Cover, ASTM Type A105	/DE-A
Stainless Steel Body and Covert, ASTM Type A1B2, Grade F316	/DE-B
Examples: 40PN-A1J5YN1S/DE-B; 40PR-A2L2YE1F/DE-A	

PHYSICAL SPECIFICATIONS

40P Series Base Instrument

Enclosure

The case and door are glass fiber reinforced polyester moldings, compounded for superior corrosion resistance. The door has a shatterproof glass window. The overall construction provides the environmental protection of IEC OP53 and the raintight protection of NEMA Type 3.

Finish

Case is gray polyester and door is blue textured (either epoxy powder or baked vinyl).

Flammability Rating

The case and door meet Type V-O of UL 94.

Blow-Out Plug

Located in the bottom of the case.

Mounting

Type 37 Differential Pressure Element is installed on rear of enclosure. Entire enclosure assembly is mounted on yoke. A kit of parts is provided for yoke mounting the instrument on a DN 50 or 2 in diameter vertical pipe stub.

Pneumatic Connections

Supply and output connections (in bottom of case) tapped for 1/4 NPT.

Electrical Connections

Two nominal 22 mm (0.9 in) diameter holes (in bottom of case) are provided for a nominal 20 mm (CEE 23), PG16, or 1/2 in conduit fitting, one each for power and measurement.

Data Label

Aluminum date label fastened to chart plate with pressure sensitive adhesive. Includes space for customer tag data up to a maximum of 220 characters and spaces. For additional space, see Optional Customer Tag.

Type 37 Differential Pressure Element

Refer to Figure 1.

Element Body Anod Cover

Zinc-Cobalt carbon steel (ASTM Type A105), or stainless steel (ASTM Type A182, Grade F316), as specified. Refer to Model Code.

Element Chamber Studs and Nuts

ASTM A193 Class B7 studs made from AISI Type 4140 steel with ASTM A194 Class 2H nuts.

Element Drive Bar Flexure

Cobalt-nickel alloy

Element Drive Bar Seal Bellows

Nickel

Element Diaphragm

316 ss

Element Range Settings

Ni-Span C™

Element Gaskets

Buna-N and Viton-A™ O-ring

Element Fill Fluid

79% pure ethylene glycol, 21% water

Element Process Connections

Two connections spaced 180° apart, top or bottom, 1/4 or 1/2 NPT, as specified.

Approximate Mass

Recorders, Indicators, and Controllers

12 to 18 kg (25 to 40 lb), depending on instrument and options selected.

Type 37 Element

17 kg (37 lb), less fill fluid and mounting parts.

Figure 1. Type 37 Differential Pressure Element

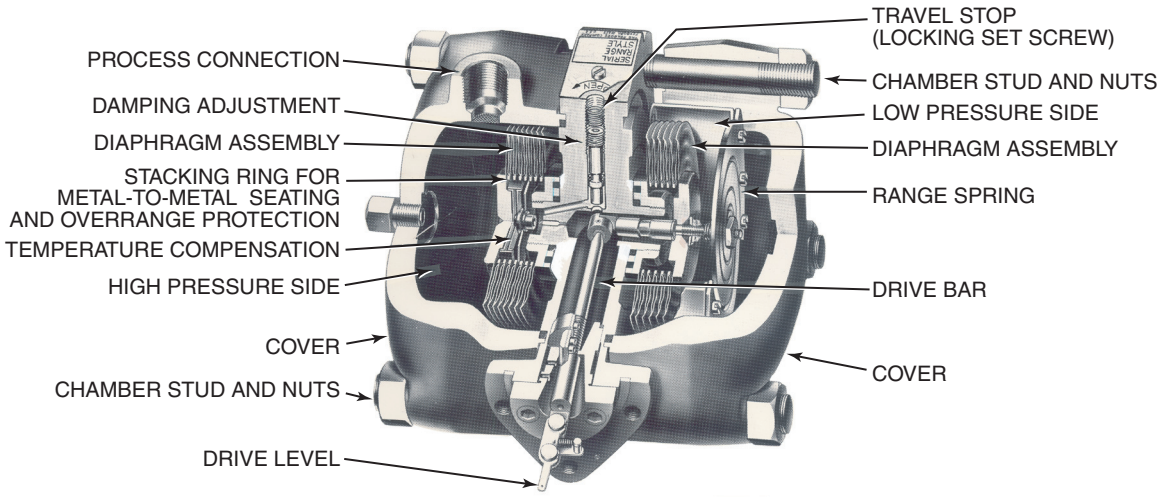

OPTIONAL FEATURES

Flush Door Lock

With two keys (AS Reference FDL)

Inlet Purge Restrictor

Connection tapped for 1/4 NPT fittings (AS Reference IPR)

Nameplate

Laminated plastic nameplates 38 x 76 mm (1.5 x 3 in) with white characters on a black back-ground. Maximum of 5 lines with 28 characters or spaces 3 mm (0.13 in) high or 24 characters or spaces 4 mm (0.16 in) high per line. (AS Reference N/P).

Internal Illumination

An incandescent lamp is available for operation from a nominal 120 or 240 V ac power source, as specified. (AS Reference II-I).

Type 70 Electric Contacts

A variety of contact systems is available to provide a wide range of switching functions to actuate external control or alarm circuits. General Purpose electrical classification only (refer to Technical Information (TI) 33-10a).

Chart Drives

Electrical, Single Speed

30 seconds; 1, 2, 4, 6, 7.5, 12, 15, 24, 30, or 96 minutes; 1, 2, 3, 4, 6, 8, or 12 hours; 2, 3, 4, 7, 8, 12, 14, or 31 days

Mechanical, Single Speed

8- or 12-hour rotation with 24-hour wind; 24- or 48-hour rotation with 7-day wind; 7-day rotation with 7-day wind; 8-day rotation with 8-day wind.

Mechanical, Two Speed

8-day/24-hour rotation with 8-day wind; 7-day/24-hour rotation with 7-day wind.

Pneumatic Escapement Type

Stop-Start operation, explosionproof construction

Internal Bumpless Automatic-Manual Transfer Station

Provides bumpless, balanceable transfer between automatic and manual control by a simple two step procedure. Accidental transfer is avoided because the door must be opened to gain access to the transfer station. Selectable using controller Model Code.

Customer Tag

Stainless steel tag attached to instrument for customer tag data that doesn't fit on data plate.There can be a maximum of 10 lines of data with 40 characters and spaces per line. Specify AS Code MTS.

Broad Range of Integral and Derivative Adjustments

The reset unit has the complete range from 0.01 to 50 minutes, the derivative unit from 0.05 to 50 minutes. Selectable using controller Model Code.

External Connection to Integral Bellows

Used when an external feedback signal must be applied to prevent integral circuit saturation (AS Reference FSM).

Batch Function Attachment

For processes involving discontinuous control, the integral function is modified to prevent overshoot and to initiate immediate corrective action when control is resumed. High Batch unit operates when controller output pressure exceeds 100 kPa (15 psi, 1.0 bar or kg/cm^2). Low Batch unit operates when controller output pressure falls below 20 kPa (3 psi, 0.2 bar or kg/cm^2). AS Reference is High Batch+S, or Low Batch+S.

Relation Attachment

Maintains a fixed manually adjustable difference between an uncontrolled variable (primary) and a controlled variable (secondary). The relation is adjustable between 0 and 50% of span (AS Reference RELATION).

External Manual Set Knob

A knob which engages with the set point adjustment mechanism is fitted on the door (AS Reference OCS).

Optional Calibration

Specify calibration required in accordance with allowable zero-based, elevated-, or suppressed-zero ranges indicated below,

Zero-Based Calibration

Any zero-based differential pressure range with upper range value between 5 and 50 kPa, 20 and 200 inH_2O, or 50 and 500 mbar ΔP.

Elevated- Or Suppressed-Zero Calibration

Elevated- or Suppressed-zero ranges whose upper range value is the lesser of 150% of span or 50 kPa, 200 inH_2O, or 500 mbar ΔP, and lower range limit is -50% of span.

Element Oxygen Service Preparation

For elements with 316 ss bodies and covers only. Fill fluid is Fluorolube™ and O-rings are Viton™. Element is cleaned, assembled, calibrated, and packaged in a cleaning room. A label is added indicating that the unit was prepared for oxygen service (AS Reference OS-FC).

Element Combinations

The Type 37 Element with additional pressure and temperature elements can be used to form a combination instrument. A suitable chart for combination measurement must be selected. A 40P Series instrument accommodates only one Type 37 Element. EM, EL, and PB-GA elements can not be combined with Type 37 Element in the 40P enclosure. Contact Invensys Foxboro for element combinations available.

ACCESSORIES

Bypass Manifolds

3- and 5-valve manifolds are in compliance with NACE requirements for gas, liquid, and vapor service. Manifold may be mounted below the instrument. For natural gas installations, based on AGA recommended practice, a double bypass and vent type manifold is standard. Additionally, block (shutoff) valves must be added close to the manifold and/or primary device. Specify type of service.

Description	Part Number
For Block (shutoff) and bypass manifold (3-valve) (NACE Compliance	C0156CS
For double bypass and vent manifold (5-valve) (NACE compliance)	C0156CT
For block (shutoff) and bypass manifold (3-valve) (None NACE)	C0156CQ
For double bypass and vent manifold (5-valve) (None NACE)	C0156CR

Flexible Connectors

For gas and liquid service. For use as impulse piping between primary device and manifold. Maximum pressure is 17 MPa (2500 psi, 170 bar or kg/cm^2), Specify Part Number B0110EB for 0.9 m (3 ft) length. Specify Part Number B0110EC for 1.8 m (6 ft) length. Two required.

Condensing Chambers

For vapor service. Horizontal condensing chambers with vent screw assembled in 1/4 NPT top connection. Piping connections tapped for 1/2 NPT. Good for steam pressure up to 7 MPa (1000 psi, 70 bar or kg/cm^2) absolute, and line temperature of 510°C (950°F) if condensing chamber temperature does not exceed 340°C (650°F). Specify Part Number 0045776. Two required.

Purge Rotameter

For gas and liquid service. A combination control valve (adjustable restrictor) and visual indicator of flow, with check valve in the outlet to prevent reverse flow. Available in many flow rate ranges for both SI and customary units. Specify flow rate and scale markings required. Two required.

Differential Pressure Regulator

Liquid or gas applications only. Supply pressure is 1.7 MPa (2500 psi, 17 bar or kg/cm^2). Differential pressure 20 kPa (3 psi, 0.2 bar or kg/cm^2). Specify Part Number B0107XX.

DIMENSIONS – NOMINAL

mm / in

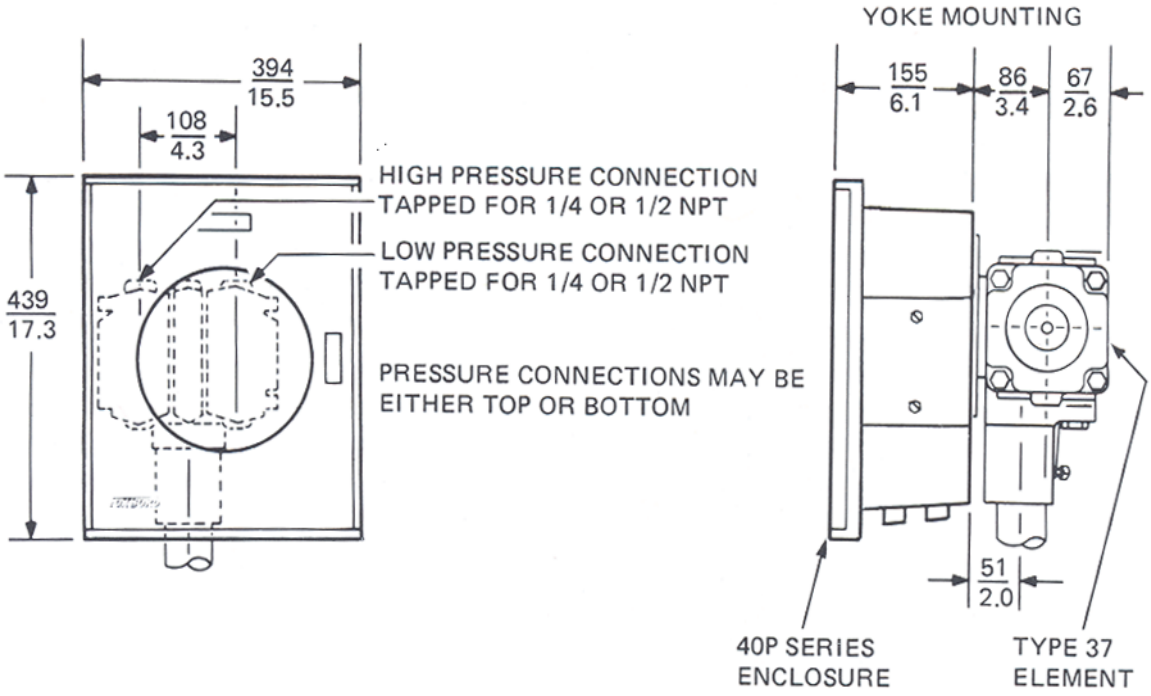

ORDERING INSTRUCTIONS

1. Model Number (refer to Model Codes)
2. Measurement Range
3. Chart or Dial Range
4. Optional Features
5. Accessories
6. Tag and Application

OTHER FOXBORO PRODUCTS

The Foxboro product lines offer a broad range of measurement and instrument products, including solutions for pressure, flow, analytical, temperature, positioning, controlling, and recording. For a list of these offerings, visit our web site at:

www.fielddevices.foxboro.com

Foxboro®
by Schneider Electric

Invensys Systems, Inc.
10900 Equity Drive
Houston, TX 77041
United States of America
http://www.invensys.com

Global Customer Support
Inside U.S.: 1-866-746-6477
Outside U.S.: 1-508-549-2424
Website: http://support.ips.invensys.com

Copyright 1977-2015 Invensys Systems, Inc.
All rights reserved.

Invensys, Foxboro, and HUMITEX are trademarks of Invensys Limited, its subsidiaries, and affiliates. All other trademarks are the property of their respective owners.

Invensys is now part of Schneider Electric.

1015